View from "Y"

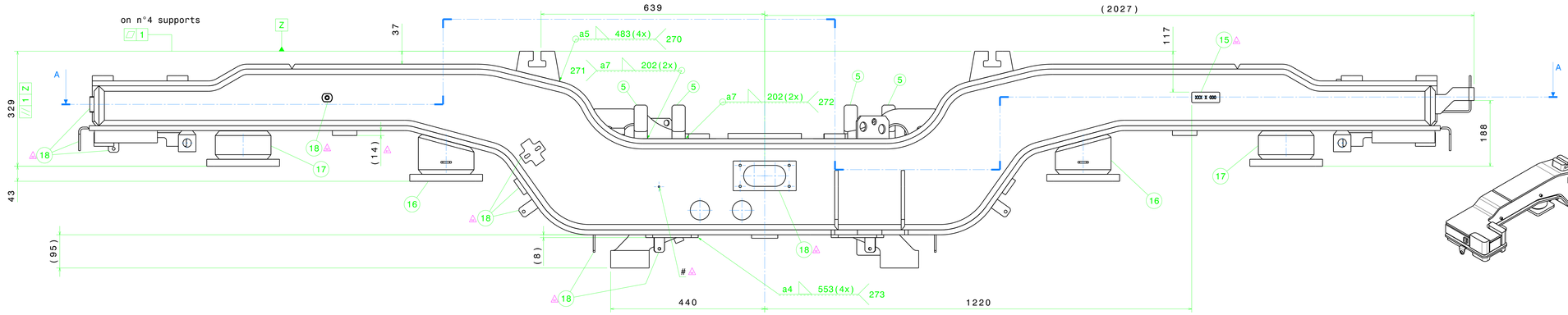

Isometric view

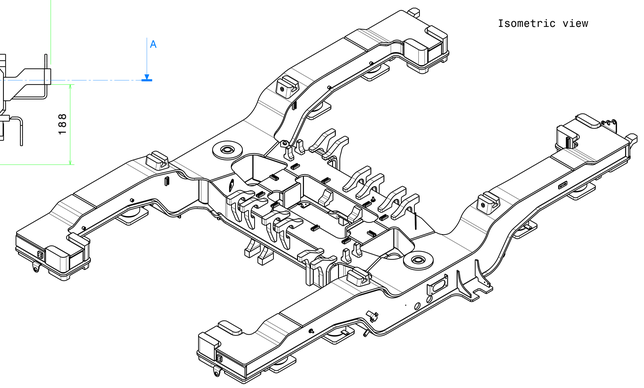

Section view A-A

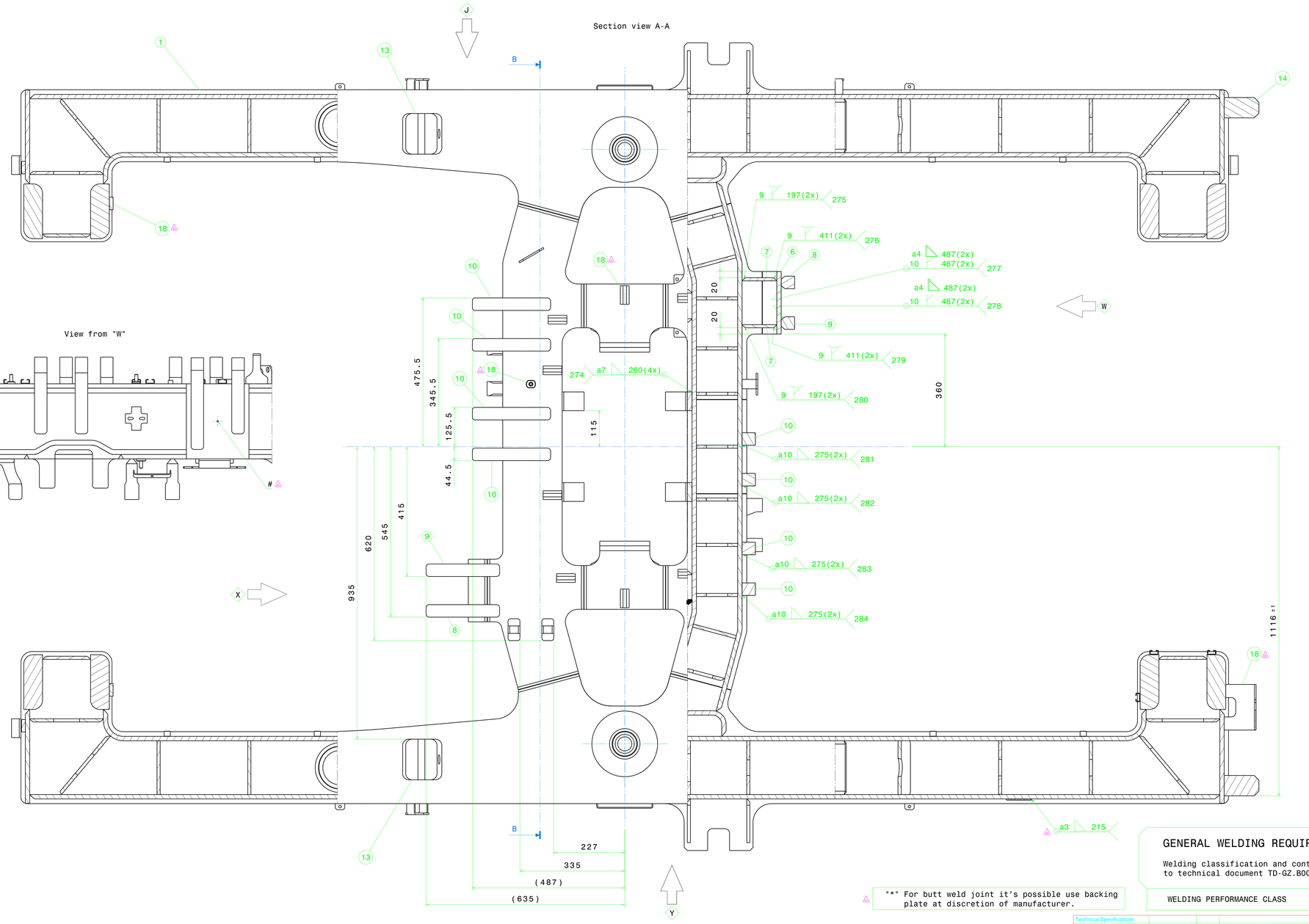

View from "J"

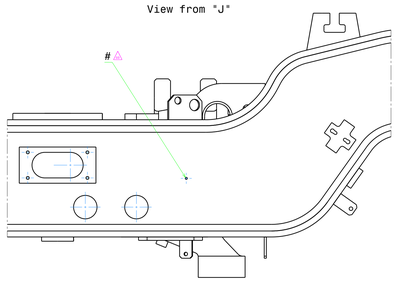

View from "W"

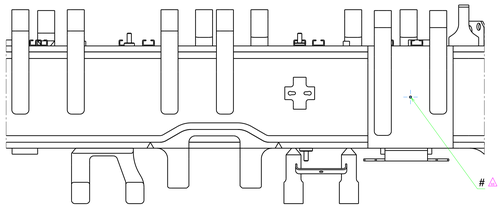

View from "X"

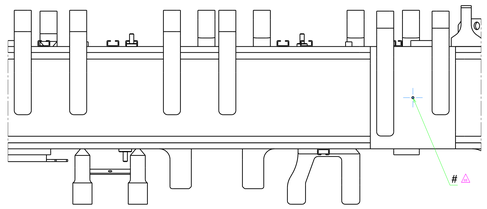

"#" NOTE:
- Vent holes for stress relieving treatment and for equipment connections of tightness test according to the TD-GZ.B00.403.0002;
- after the test, seal with welding all gases vent holes.

No	Parça Adı / Designation Name of Item	Adet / Qty.	Resim No / Norm / Drawing No / Norm	Malzeme / Material	Ölçü / Dimension	Ağırlık / Weight (Kg)
18	Implant fastening	1	GZ10.04.03.90000	-	-	8.792 kg
17	Primary support with straight tube	4	GZ10.04.03.20300	-	-	8.245 kg
16	Primary support with inclined tube	4	GZ10.04.03.20200	-	-	6.935 kg
15	Serial number plate	1	GZ10.04.03.20014	S355J2 EN 10025	-	0.074 kg
14	Limiting roller support	2	GZ10.04.03.20013	S355J2 EN 10025	-	2.286 kg
13	Lateral lifting support	4	GZ10.04.03.20012	S355J2 EN 10025	-	6.4kg
12	Axlebox stop plate	4	GZ10.04.03.20011	S355J2 EN 10025	-	0.992 kg
11	Lower motor support (type 2)	2	GZ10.04.03.20010	S355J2 EN 10025	-	4.714 kg
10	Upper motor support	8	GZ10.04.03.20009	S355J2 EN 10025	-	5.592 kg
9	Long gearbox support bracket	2	GZ10.04.03.20008	S355J2 EN 10025	-	6.243 kg
8	Short gearbox support bracket	2	GZ10.04.03.20007	S355J2 EN 10025	-	5.614 kg
7	Vertical gearbox support reinforcement	4	GZ10.04.03.20006	S355J2 EN 10025	-	1.591 kg
6	Vertical gearbox support plate	2	GZ10.04.03.20005	S355J2 EN 10025	-	6.528 kg
5	Lateral damper support	4	GZ10.04.03.20004	S355J2 EN 10025	-	1.081 kg
4	Re-Railing support	4	GZ10.04.03.20003	S355J2 EN 10025	-	1.364 kg
3	Central lifting support	4	GZ10.04.03.20002	S355J2 EN 10025	-	2.007 kg
2	Lower motor support (type 1)	1	GZ10.04.03.20001	S355J2 EN 10025	-	11.33 6kg
1	Welded complete skeleton assembly	1	GZ10.04.03.30000	-	-	1547.688kg
						1785.9

GENERAL WELDING REQUIREMENTS

Welding classification and controlling according to technical document TD-GZ.B00.303.0001

WELDING PERFORMANCE CLASS	CP C2

"*" For butt weld joint it's possible use backing plate at discretion of manufacturer.

Technical Specifications					
Technical Document		3	Added limiter roller support welding joint and tightness test note	08/08/2023	D.Carlino
Fixture/Mould Asset ID.		2	Updated implant fastening and added serial number plate	21/06/2023	D.Carlino
Coating/Heat Tre./Roughness		1	Updated geometry, dimensions and Added note	06/12/2022	D.Carlino
Paint/Color		Modf. No	Modification Description	Date	Sign

Approved	L.Giovinazzo	06/12/2022	Scale
Checked	M.Borlo	06/12/2022	1:5
Prepared	D.Carlino	06/12/2022	

TYP

Complete motor bogie frame wld

-

TURASAS
Turkish Railway Vehicles Industry Inc.

GZ10.04.03.20000

Date:08/08/2023 | Sheet : 1/2 | Size:A0 | Rev: 03

ISO 21920-1	ISO 8015	ISO 2553	General Tol.	ISO 2768 f m K H K
EN 15085-2 Certification Level		CL1 CL2 CL3	Weld Pro.	ISO 13920 A B C E F
			Cast Steel	ISO 12708 Lm2 Lr2 Sm2 Sr2

ISO 13920 Welded Construction ISO 2768 General Tolerances S 12708 Steel Casting
<1000 6,0 0,8
<630 4,0 0,7
<400 3,0 0,6
<250 3,0 0,4
100 2,0 0,3
40 1,5 0,2
L mm Hem Yp.
Nom. Size Class
<4000 2,0 0,4
<2000 1,2 0,4
<1000 0,8 0,3
<400 0,5 0,3
30-120 0,3 0,2
2-30 0,2 0,1
L mm m ± K ±
Nom. Size Class
>20000 9,0 8,0
<20000 8,0 7,0
<16000 7,0 6,0
<12000 6,0 5,0
<8000 5,0 4,0
<4000 4,0 3,0
<2000 3,0 2,0
<1000 2,0 1,5
<400 1,0 1,0
30-120 1,0 0,5
2-30 1,0 0,5
L mm A ± E ±
Nom. Size Class

Reproduction, dissemination or use of this document is not allowed without the prior written permission of TURASAS is prohibited. Offenders will be liable for the payment of damages. All rights reserved in the event of the grant of a patent, utility model or ornamental design registration.